 DOI: 10.20858/tp.2016.11.2.7

bolster-beam; structural analysis; finite elements model; multibody model; railway testing

Ronald M. MARTINOD, German R. BETANCUR
Jorge L. RESTREPO, Leonel F. CASTAÑEDA*
Universidad EAFIT, Cr. 49 N° 7 Sur – 50, Medellín, Colombia
**Corresponding author*. E-mail: lcasta@eafit.edu.co

STRUCTURAL ANALYSIS OF RAILWAYS BOLSTER-BEAM UNDER COMMERCIAL OPERATION CONDITIONS: OVER-TRACTION AND OVER-BRAKING

Summary. The conditions for the operation of railway systems are closely related to the increase of the commercial demand; as a consequence, the performance of the structural elements of railways changes. The present paper focuses on a study of the structural behaviour of bolster-beams under commercial operation conditions of railway systems, specifically in the dynamic conditions generated in events of over-traction and over-braking on the vehicle running. The proposed work is constructed based on the following phases: (i) analysis of the kinematics of the vehicle; (ii) development of numerical models, a model based on the multibody theory, and a Finite Elements model; (iii) development of experimental field tests; and (iv) development of simulations for a detailed analysis of the structural behaviour for a study of the strain distribution in the main bolster-beam. This study is applied to a particular case of a railway system that provides commercial service to passengers.

ANÁLISIS DEL ESTRUCTURAL DE LAS TRAVIESAS DE TRENES BAJO CONDICIONES DE OPERACIÓN COMERCIAL: SOBRE-ACELERACIÓN Y SOBRE-FRENADO

Resumen. Las condiciones de operación de los sistemas ferroviarios se encuentran estrechamente relacionadas con el incremento de la demanda, en consecuencia el comportamiento de los elementos estructurales del tren varían. El presente trabajo se enfoca en el estudio del comportamiento estructural de la traviesa pivote, bajo condiciones de operación comercial de un sistema ferroviario, específicamente en las condiciones dinámicas generadas en los eventos de sobre-aceleración y sobre-frenado del vehículo. El trabajo propuesto se estructura con base en el siguiente conjunto de etapas: (i) estudio de la cinemática del vehículo en marcha; (ii) desarrollo de modelos numéricos uno basado en la teoría multi-cuerpo y otro basado en Elementos Finitos; (iii) desarrollo de pruebas experimentales en campo; y (iv) desarrollo de simulaciones para el análisis detallado del comportamiento estructural para el estudio del flujo de los esfuerzos en la traviesa pivote. El trabajo es aplicado a un caso particular de estudio de un sistema ferroviario que presta servicio comercial de pasajeros.

1. INTRODUCTION

Passenger trains have a two stages suspension system: the primary and the secondary. The primary suspension stage is composed of springs and dampers that connect the axle box to the bogie - coil springs, guide leafs and vertical dampers; the secondary suspension stage connects the bogie to the carbody - air-springs, traction link, vertical dampers and transvers dampers [1]. The bolster-beam is a structural element of the carbody that has two main functions: (i) to provide mechanical stiffness to the loads distribution; and (ii) to allow the connection to the bogie in the secondary suspension stage. To study in depth the second main function, the bolster-beam must, among others: (i) transmit the vertical loads of traction and braking; and (ii) provide longitudinal stability of the bogie frame and a loads distribution over the axle box for the vehicle traction [2].

The bolster-beam has been designed with the purpose of eliminating metal-to-metal contacts among elements and to increase the friction torque to resist the bogie yaw. The design provides sufficient ride quality (comfort) only for bogies that have low lateral stiffness of secondary suspension [3]; besides, the majority of the carbody mass is directly transmitted to the secondary suspension stage, and the carbody can only rotate in relation to the bogie about a vertical axle. This design is widely used in passenger trains, for example, in the former USSR [2, 4].

The analysis of this paper includes the longitudinal dynamics field of the train, which has been studied by the Australian railway industry [5]. The structures - bridges, viaducts, tunnels, etc. - the rolling-stock and, especially, the brake systems are clearly regulated by the British railway lines [5, 6]. Previous studies of the longitudinal dynamics of the train have been published, and there are studies regarding measurements and simulations of the in-tain forces distribution on such trains in the coal haulage [6]. Other studies are related to the dynamics of multiple coupled units in service [7], and the whole of these studies has been the basis for the calculation of loads and the estimation of limit values of the considered forces in development and design strategies [5].

Current studies place emphasis on studying the relation between the longitudinal dynamics of the train and the energy management; studies based on measurements and dynamic simulations of trains have been applied to the longitudinal guiding of the vehicle to reduce the energy consumption [8, 9]. On the other hand, the present study is based on the measurements and dynamic simulations, directed towards the structural behaviour of the bolster-beam, under commercial conditions, and focused on the over-traction and over-braking events of the vehicles running.

The evaluation of accelerations and in-train forces in over-traction and over-braking is done by means of two stages implemented via a superposition method. The first analysis stage uses the Multi-Body System (MBS) technique. MBS solves the nonlinear equations that govern the motion of the system; the components of MBS can experience large rotations and displacements, and the motion of these components is subjected to kinematic constraints that are the result of mechanical joints and specified motion trajectories. The second analysis stage uses Finite Elements (FE) technique. FE considers the linear elasticity of the components; it provides a linear relation between nodal forces and nodal displacements and flexible modes.

2. DESCRIPTION OF THE OBJECT OF THE STUDY

The study concerns passenger vehicles belonging to the mass transport railway vehicle fleet of Medellin city (Colombia) delivered in 1995, which is a railway system similar to other suburban trains [4]. The original equipment of the rolling-stock was Maschinenfabrik Ausburg-Nürnberg MAN for mechanical components and Siemens for electrical components. The vehicles are similar in geometry and design to the ET420 trains set, formerly operated by Deutche Bahn, e.g. Munich S-Bahn [10].

Each unit is composed of three cars equipped with short couplings. The end cars are powered while the central car is an unpowered trailer car. The traction is realised by a DC motor set located in transversal position, and the drive is transmitted from the motor gear through the output gear directly to the axle [4]. The vehicle traction in AW1 load condition (5.5 passengers/m^2) is estimated as $A(t) = 0.95\ m/s^2$, and in AW2 condition (8 passengers/m^2) is reduced to $A(t) = 0.85\ m/s^2$. The vehicle

braking in service is between 1.7 m/s^2 and 1.6 m/s^2. The system uses an electro-dynamic regeneration braking system with a speed above 8 km/h, and the pneumatic brakes, which are composed by disc brakes, are used under the 8km/h [11].

The bolster-beam is an element built in aluminium alloy AlZn4.5Mg1F35, series EN AW 7020 T6 [12], composed by a welding of four extruded profiles, one superior, and three in the bottom side (one central and two laterals). A detailed description of the bolster-beam can be found in [13].

2.1. Kinematics of the vehicle running

A train moves on a track with the speed profile records $V(t)$, which are processed by using a piecewise linear regression model with correlation coefficient values $\sqrt{R^2} > 0.98$, obtaining the vehicle acceleration profile $A(t)$. The $\sqrt{R^2}$ values represent an association measurement of the statistical model with the obtained data [14]. The linear regression (see Fig. 1) shows the relation between a dependent variable $V(t)$, the independent variables t_i and a random element ε, and this model can be expressed as [15]

$$V_i(t) = \beta_1 + A(t)\, t_i + \varepsilon_i, \tag{1}$$

in which β_1 is the constant element, $\beta_1 = \overline{V}(t) - A(t)\,\bar{t}$, and $A(t)$ is calculated from the information contained in the t_i sample observations of the historical records,

$$A(t) = \frac{\sum(t_i-\bar{t})(V_i-\bar{V})}{\sum(t_i-\bar{t})^2}. \tag{2}$$

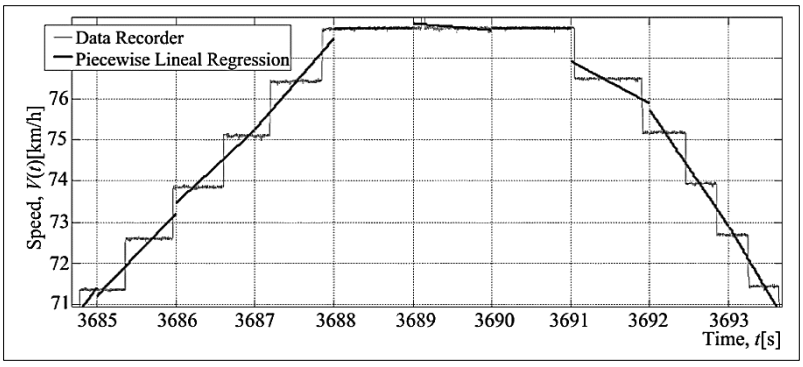

Fig. 1. Estimation of the piecewise linear regression model
Fig. 1. Estimación del modelo de regresión lineal por tramos

2.2. Running acceleration analysis

A goodness of fit test of the discrete variable $A(t)$ was performed to determine the random degree in which it is constructed [15]. The probabilities adjustment establishes that $A(t)$ comes from a set of adjusted distributions to the Gaussian probability, transforming the discrete variable to a continuous-theoretical variable [16], with the density function of a normal distribution, with average values μ and variance values σ^2. The goodness of fit test establishes that the running acceleration profile $A(t)$ in each kinematic condition (traction and braking) has two characteristic behaviours: (i) middle; and (ii) high—over—(see Fig. 2). It means that the mean values for the train traction and brake lie between $0.503\mathrm{m/s^2}$ and $-0.437\mathrm{m/s^2}$. Nevertheless, the train presents another recurrent normal tendency of over-traction and over-braking (see Table 1). In commercial operation conditions, the vehicle running has: (i) a mean over-traction 20% superior to the designed value; and (ii) a mean over-braking 18% superior to the designed value.

The Chebyshev theory provides a conservative estimation of the probability that a random variable takes within k standard deviations from its average to any k real number. The probability of the

random variable $A(t)$ taking value within k standard deviations $\sqrt{\sigma^2}$ from the mean [15], is at least $1 - 1/k^2$, i.e.

$$P(\mu - k\,\sigma < A(t) < \mu + k\,\sigma) \geq 1 - \frac{1}{k^2}. \quad (3)$$

Therefore, around 99.7% of all the values from a normal distributed sample are within $\pm 3\sqrt{\sigma^2}$ from the mean μ [16], commonly known as the three-sigma rule, $\mu \pm 3\sqrt{\sigma^2}$. With $A(t)_{max} = \mu \pm 3\sqrt{\sigma^2}$ it is possible to infer, with a 99.7% certainty, that:

- the maximum over-traction of the vehicle is $A(t)_{max} = 2.024 m/s^2$; and
- the maximum over-braking of the vehicle is $A(t)_{max} = 1.986 m/s^2$.

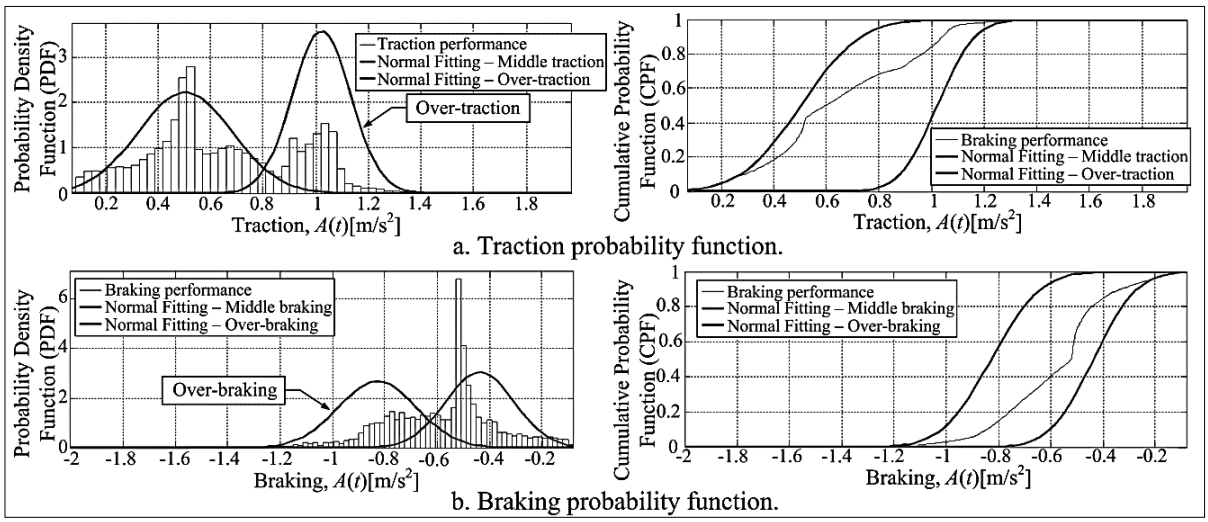

Fig. 2. Running acceleration $A(t)$, probability function
Fig. 2. Aceleración de marcha $A(t)$, función de probabilidad

Table 1

Results of the historical records analysis

Kinematic condition		Statistic $A(t)$ [m/s^2]			$A(t)_{max}$
		μ	$\sqrt{\sigma^2}$	ε	
Traction	Mean	0.503	0.423	1.3E-3	1.772
	High –over–	1.022	0.334	1.2E-3	2.024
Braking	*Mean*	-0.437	0.362	0.9E-3	1.523
	High –over–	-0.828	0.386	1.4E-3	1.986

3. MULTIBODY MODEL DEVELOPMENT

A numerical model of the running acceleration railway allows for investigating the effects of a wide range of possible variations of the train parameters [17]. The obtained results of a model provide accurate predictions of the dynamic behaviour [18, 19]. The general standpoint of a virtual model is to integrate the Ordinary Differential Equation (ODE) numerically [19]. The ODE can be solved using one or various integration algorithms, which is equivalent to physical experimentation where the system is subject to given conditions and its response is registered [3, 21].

The computational simulations are a valid source of necessary information to prove formulated methods [22]. Recent progress in the computational mechanical field and numerical methods can be directly applied to the non-linear mechanical analysis.

3.1. Multibody model validation process

The validation process has been structured in two phases: (i) a series of experimental field tests recorded of a motor car, unit 41, done in September 2011; and (ii) the obtained results of a dynamic simulations set of the numerical model. For each phase, two scenarios were designed (see Table 2): (i) acceleration - entrance to the station; and (ii) braking - exiting the station.

Table 2

Test scenarios description

Description		Test scenarios			
		Braking (entrance to the station)		Traction (exiting the station)	
		Experimental	Numerical	Experimental	Numerical
Speed, V[km/h]		{61...0}	{61...0}	{0...68}	{0...68}
Running acceleration, A[m/s^2]		{-1.2...0}	{-1.2...0}	{0...1.0}	{0...1.0}
Line section length, s[m]		254.1	254.0	288.0	274.0
Coef. of friction, μ		Dry	$\mu = 0.5$	Dry	$\mu = 0.5$
Gauge [mm]		1435	1435	1435	1435
Recorded time, t[s]		52.07	51.48	70.46	68.79
Sampling frequency, f_s[Hz]		2400	1000	2400	1000
Adq. filter	Type	anti-aliasing	--	anti-aliasing	--
	Freq. [Hz]	1200 Hz	--	1200 Hz	--
Digital filter	Type	Elliptic	2-pole Butterworth	Elliptic	2-pole Butterworth
	inf/sup band [Hz]	0.5 / 5.0	0.5 / 5.0	0.5 / 5.0	0.5 / 5.0

3.2. Experimental field test

A motor car is implemented, choosing a train according to the following rules: (i) a vehicle without unconformities after the last maintenance; (ii) a vehicle that is not close to a major maintenance; (iii) vehicles without rare elements attached to the pivot beam - it could be a repaired vehicle; and (iv) vehicles without live load (AW0).

The bolster-beam has been implemented heading to the direction of the running of the train. A set of measurements has been established, directly related to the dynamic behaviour of the bolster-beam. The conditions of the experimental test are exposed in a previous study [13], and the test is composed of the record of eight signals - speed, forces and accelerations - distributed in five measurement points.

3.3. Multibody numerical tests

The numerical tests are developed by implementing the ODE of the model, which is usually called simulation or numerical experimentation, where the system is subjugated to given conditions and the answer is registered. This standpoint is convenient because it allows for the evaluation of the response in any type of excitation [21].

The validation process of the numerical model proposes that the simulation must emulate the dynamic conditions existing in the experimental field tests [1], and it is, therefore, necessary to realise a set of simulations. The developed numerical model has 120 degrees of freedom (DoF) [10]; the graphical representation is shown in Figure 3, and it is based on the multibody theory, using the integration algorithms developed by Vampire®. The values of the particular parameters of the model are exposed in a study of suspension elements in railway systems [4].

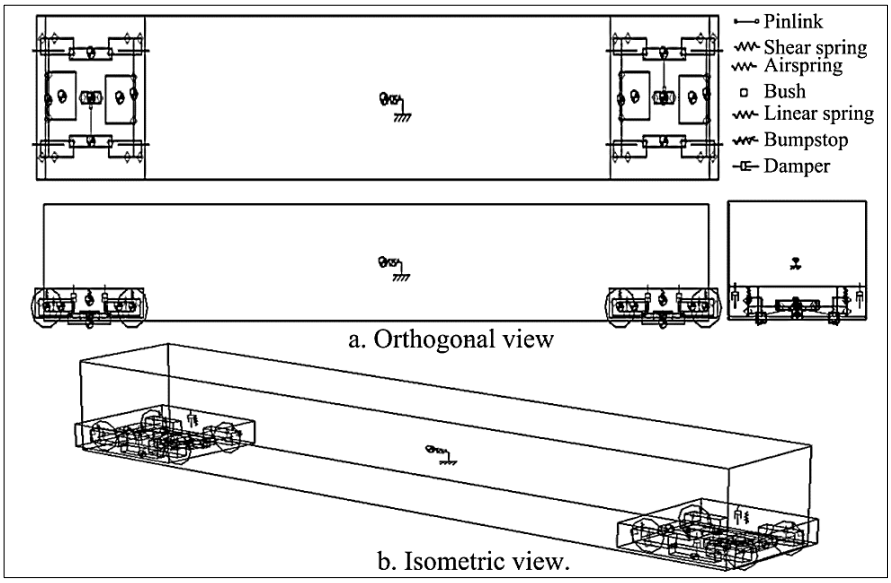

Fig. 3. Graphic representation of the multibody numerical model
Fig. 3. Representación geográfica del modelo multibody numerical model

3.4. Processing the information for the validation of the numerical model

The validation process is based on the direct comparison between: (i) the experimental field tests; and (ii) the numerical tests. A set of experimental and numerical signals are presented in Appendix A, showing the behaviour of some representative signals in a time domain; these are also presented in a frequency domain - Power Spectral Density - observing that the frequency range is below a 5% deviation.

The rms value is the estimator used to describe the dynamic signals in a time domain; therefore, the difference can be established of the rms values as the quantification of a deviation error between the signals, $\varepsilon_{\mathrm{rms}}$, obtained with the experimental tests and the numerical model. The $\varepsilon_{\mathrm{rms}}$ values have been classified according to their physical nature of measurement: (i) force deviation error, $\varepsilon_{\mathrm{F\,rms}}$ – expressed in load terms; and (ii) acceleration deviation error, $\varepsilon_{\mathrm{A\,rms}}$. As a result, we obtain $\varepsilon_{\mathrm{rms}} = \{\varepsilon_{\mathrm{F\,rms}}, \varepsilon_{\mathrm{A\,rms}}\}$, representing the model precision indicator (see Table 3).

Considering a limit value to the indicator $\varepsilon_{\mathrm{F\,rms}}$ equivalent to a hundredth fraction of the carried load by the carbody $\mathrm{m_{CB}}$, i.e. $\varepsilon_{\mathrm{F\,lim}} = \frac{\mathrm{m_{CB}}}{100} = 236.03\mathrm{kg}$, it is observed that $\varepsilon_{\mathrm{F\,rms}} \ll \varepsilon_{\mathrm{F\,lim}}$. On the other hand, considering a limit value to the indicator $\varepsilon_{\mathrm{A\,rms}}$ equivalent to a hundredth part of the gravitational constant –1G–, i.e. $\varepsilon_{\mathrm{A\,lim}} = \frac{1\mathrm{G}}{100} = \frac{9.801\mathrm{m/s^2}}{100} = 0.098\mathrm{m/s^2}$, it is observed that $\varepsilon_{\mathrm{A\,rms}} \ll \varepsilon_{\mathrm{A\,lim}}$. It is hence possible to consider valid the numerical model because the values $\varepsilon_{\mathrm{rms}} = \{\varepsilon_{\mathrm{F\,rms}}, \varepsilon_{\mathrm{A\,rms}}\}$ represent an acceptable deviation level of this study.

Table 3

Difference of the values rms, ε_{rms}

Test scenarios	Error. $\varepsilon_{F\,rms}$ [kg-f]				Error. $\varepsilon_{A\,rms}$ [m/s^2]		
	$F1L$	$F1C$	$F5V$	$F6V$	$A7L$	$A7T$	$A7V$
Braking (entrance to the station)	133.713	11.309	81.619	09.609	0.032	0.024	0.006
Traction (exiting the station)	125.304	03.010	73.262	92.763	0.032	0.019	0.040

4. DEVELOPMENT OF THE FINITE ELEMENTS MODEL

This study proposes a structural behaviour study of the bolster-beam; therefore, it is necessary to perform a load distribution analysis in the bolster-beam based on the multibody simulation results. The use of the multibody algorithms allows modelling flexible bodies with the use of the Finite Elements method or any other techniques of structural analysis [23, 24]. A Finite Elements (FE) model is developed using Ansys®, which is characterised because the measurement points of the multibody simulation represent the boundary conditions of the FE model, which considers the entirety of the frame geometry; although the frame geometry of the carbody has two symmetry planes: (i) the longitudinal; and (ii) the transversal. The FE model must have the complete representation of the frame because of all inertial components and the loads have non-symmetric components. Therefore, the frame is composed of two sections (see Fig. 4): a section corresponding to the frontal half of the frame, which is modelled in detail for studying the load distribution in the bolster-beam, and another section corresponding to the half rear of the frame, with simplified elements because it is used to allow the proper transmission from the loads to the rear pivot beam under non-symmetric conditions.

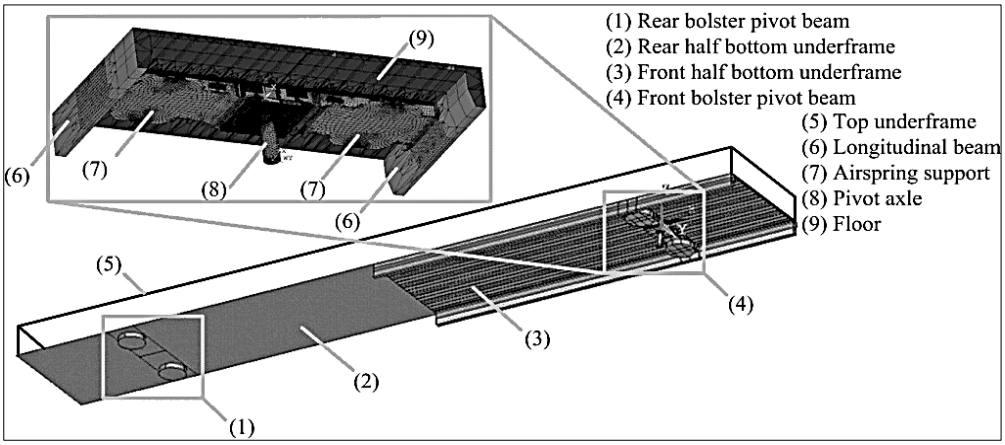

Fig. 4. Graphic representation of the FE model of the carbody frame
Fig. 4. Representación gráfica delñ modelo FE del chasis

The FE model considers the floor structure with elements of aluminium plates to adequately simulate the distribution of the loads applied to the pivot beam; the frontal section is modelled with elements as shell63—plate—of connected aluminium, maintaining the continuity of the material—with the respective profiles and geometries. The subsequent section is modelled with elements as shell63 and Beam188—with equivalent transversal sections. The pivot axle is modelled with steel elements as Solid185—hexahedron—which are united to the pivot beam panels with common nodes to the elements to simulate a rigid unification.

The FE model considers the effect of the air-springs and the traction links, where the pivot beam is supported. These have been modelled as solid elements with equivalent areas and stiffness to the ones described by the manufacturer [11], an equivalent stiffness of the air-spring of $200\ \mathrm{kN/m}$, and an equivalent stiffness to the traction link of $3600\ \mathrm{kN/m}$. The effect of the lateral dampers is modelled by using elements Combin14—air-spring—dampers, which consider the behaviour of the train in the three coordinate axes. The inertial effect of the carbody is modelled by using a remote mass as Mass21—punctual mass—attached to the floor and located in the centre of mass. Furthermore, the FE model considers the existing structural elements in the roof and in the lateral panels by means of a simplified modelling of a framework with such elements as Beam188. The size of the elements in the mesh is variable, so that the belonging components of the frontal pivot beam have fine mesh elements, and in different regions, the mesh elements have a bigger size.

5. STUDY CASE, APPLYING THE NUMERICAL MODEL

The virtual techniques allow the generation of a large amount of information, not only from the dynamic behaviour response but also information from the interaction of the components and details of their capacity that can be compared only with physic prototypes [21]. Two vehicle pivot beams have been implemented, establishing six measurement points (see Fig. 5) to each bolster-beam. The measurement points coincide with the connection elements in the secondary suspension stage. The simulation of the multibody model is made under the following conditions: (i) commercial operation; (ii) AW2 load; and (iii) focus on the dynamic response of over-traction $\mathrm{A(t)_{max}} = 2.024\ \mathrm{m/s^2}$, and over-braking $\mathrm{A(t)_{max}} = 1.986\ \mathrm{m/s^2}$.

Each measurement point of the multibody simulation corresponds to the frontier condition of the FE model.

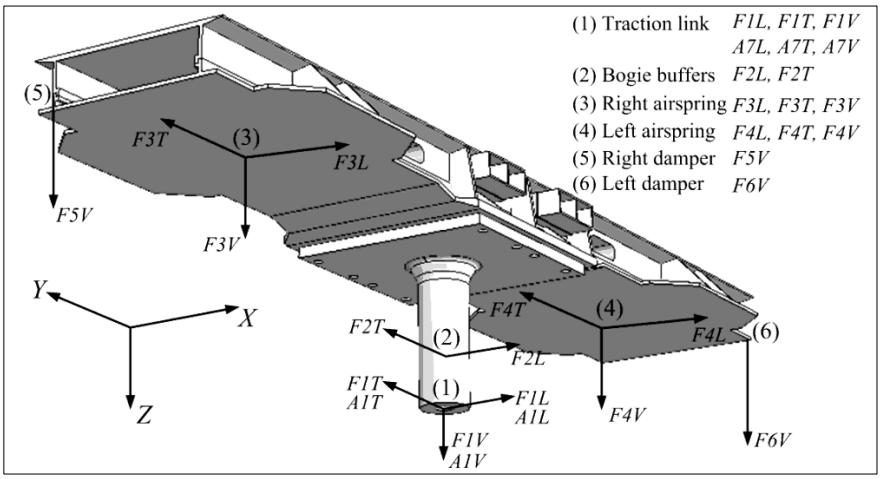

Fig. 5. Measurement points in the multibody numerical model
Fig. 5. Puntos de medición en el modelo numerico multi-cuerpo

The load distribution in the pivot beam has been determined (see Table 4) for each one of the over-traction and over-braking events in the running of the vehicle. In a study of structural diagnosis of rail vehicles [13] is shown in detail the strain distribution under commercial operation conditions of over-traction and over-braking.

Table 4

State of charge applied on the pivot beam

Test scenarios	Loading condition	Load state [kN]				
		$F1L$	$F3L$	$F3V$	$F4L$	$F4V$
Over-braking	AW2	4.625	1.451	55.619	1.452	55.593
Over-traction	AW2	-8.470	-0.162	56.467	-0.159	56.439

6. CONCLUSIONS AND FUTURE WORK

The work proposes a procedure based on the historical records of the vehicles running speed $\mathrm{V(t)}$ to find the adjusted distribution to the probabilities of the acceleration-braking of the vehicle $\mathrm{A(t)}$, finding two characteristic behaviours: (i) mean; and (ii) high—over. A high behaviour corresponds to an over-traction and an over-braking condition of the vehicle under commercial operation.

The mechanical calculation of the bolster-beam developed by the manufacturer in the train design phase, in which some kinematic conditions—traction and braking—have been defined, have been considered acceptable under the operation conditions projected in the 1990s decade. Nevertheless,

those kinematic conditions differ from the current commercial operating conditions of the train because the system currently presents the condition of over-traction and over-braking while running, corresponding to 2.03 and 1.89 times the design.

The present work shows a significant utility, considering the fact the recorded information allows for obtaining real commercial operation condition with the use of virtual techniques that allow generating a big amount of information, avoiding unnecessary dead times on the part of the system to inspection.

The recorded signals in a period of sufficient time allow for doing statistics that can be used for the fatigue calculation of the bolster-beam components, projections for a bigger maintenance, and also, for a re-design of the bolster-beam components that consider the particular conditions of the current commercial operation and that provide future operation requirements. In other words, this developed work represents a technological basis for the development of refurbishing based on the operation condition.

References

1. Martinod, R.M., Betancur, G.R., & Castañeda, L.F. Evaluation of the damping elements for two stage suspension vehicles. *Ingeniería e Investigación*. 2012. Vol. 32. No. 1. P. 11−17.
2. Orlova, A. The anatomy of railway vehicle running gear. In: *Handbook of Railway Vehicle Dynamics*. Editor S. Iwnicki. First Edition. Florida: Taylor & Francis. 2006. 535 p.
3. Wickens, A.H. *Fundamentals of rail vehicle dynamics: guidance and stability*. Netherlands: Swets & Zeitlinger. 2003. 286 p.
4. Martinod, R.M., Betancur, G.R., & Castañeda, L.F. Identification of the technical state of suspension elements in railway systems. *Vehicle System Dynamics*. 2012. Vol. 50. No. 7. P. 1121−1135.
5. Cole, C. Longitudinal train dynamics, In: *Handbook of Railway Vehicle Dynamics*. Editor S. Iwnicki. First Edition. Florida: Taylor & Francis. 2006. 535 p.
6. Duncan, I.B. & Webb, P.A. The longitudinal behaviour of heavy haul trains using remote locomotives. In: *Four International Heavy Haul Conference*. Brisbane. 1989. P. 587−590.
7. Jolly, B.J. & Sismey, B.G. Doubling the length of coals trains in the Hunter Valley. In: *Four International Heavy Haul Conference*. Brisbane. 1989. P. 579−583.
8. Scown, B., Roach, D. & Wilson, P. Freight train driving strategies developed for undulating track through train dynamics research. In: *Conference on railway engineering*. Rail Technical Society of Australia. Australia. 2000. P. 27.1−27.12.
9. Simon, S. & Cole, C. & Wilson, P. Evaluation and training of drivers during normal train operations. In: *Conference on railway engineering*. Rail Technical Society of Australia. Australia. 2002. P. 329−336.
10. Castañeda, L.F. & Martinod, R.M. & Betancur, G.R. Determination of the technical state of suspension elements based on the OMA-LSCE method. *Ingeniería Ferroviaria*. Vol. 67. No. 1. P. 41−54.
11. MAN. *Cálculo estático traviesa del pivote para el tren metropolitano de Medellín*. Technical report Nr. X81120-MAE-MC-006/aN, Nürnberg. 1986. [In Spanish: *Static analysis of the bolster pivot beam to the Medellin railway*].
12. EN 755-2. *Aluminium and aluminium alloys. Extruded rod/bar, tube and profiles*. Mechanical properties. European standards. 2008.
13. Aristizabal, M. & Barbosa, J.L. & Betancur, G.R. & et al. Structural Diagnosis of Rail Vehicles and Method for Redesign. *Diagnostika.* 2014. Vol. 15. No 3. P. 23−31.
14. Grant, E.L. *Statistical Quality Control*. India: McGraw Hill. Fourth edition. 1997. 764 p.
15. Walpole, R. & Myers, R. & Myers, S. & Keying, Y. *Probability & statistics for engineers & scientists*. Ninth Edition. London: McGraw-Hill. 2011. 816 p.
16. Levin, R.I. & Rubin, D.S. *Statistics for management*. Seventh Edition. Pearson. 2011. 1118 p.

17. Goda, K. & Goodall, R. Fault-Detection-and-Isolation System for a Railway Vehicle Bogie. In: *The Dynamics of Vehicles on Roads and on Tracks*. Editor M. Abe. Vol. 41. London: Taylor & Francis. 2003. P. 468−476.
18. Goodall, R.M. & Iwnicki, S. Non-Linear Dynamic techniques. Equivalent Conicity Methods for Rail Vehicle Stability Assessment. In *The Dynamics of Vehicles on Roads and on Tracks*. Editor M. Abe. Vol. 41. London: Taylor & Francis. 2003. P. 791−799.
19. Polach, O. & Berg, M. & Iwnicki, S. Simulation. In: *Handbook of Railway Vehicle Dynamics*. Editor S. Iwnicki. *First Edition*. Florida: Taylor & Francis. 2006. 535 p.
20. Shabana, A.A. & Zaazaa, K.E. & Sugiyama, H. *Railroad vehicle dynamics a computational approach*. Florida: Taylor & Francis. 2008. 343 p.
21. Genta, G. *Vibration dynamics and control*. Torino: Springer Science Business. 2009.
22. Uhl, T. *The inverse identification problem and its technical application*. Springer-Verlag. 2006.
23. Seo, J.H. & Sugiyama, H. & Shabana, A.A. Three dimensional large deformation analysis of multibody pantograph/catenary systems. *Nonlinear Dynamics*. 2005. Vol. 42. P. 199−215.
24. Shabana, A.A. *Dynamics of multibody systems*. Third Edition. Cambridge: University press. 2005.

Appendix A. Register of the dynamic signals for the validation

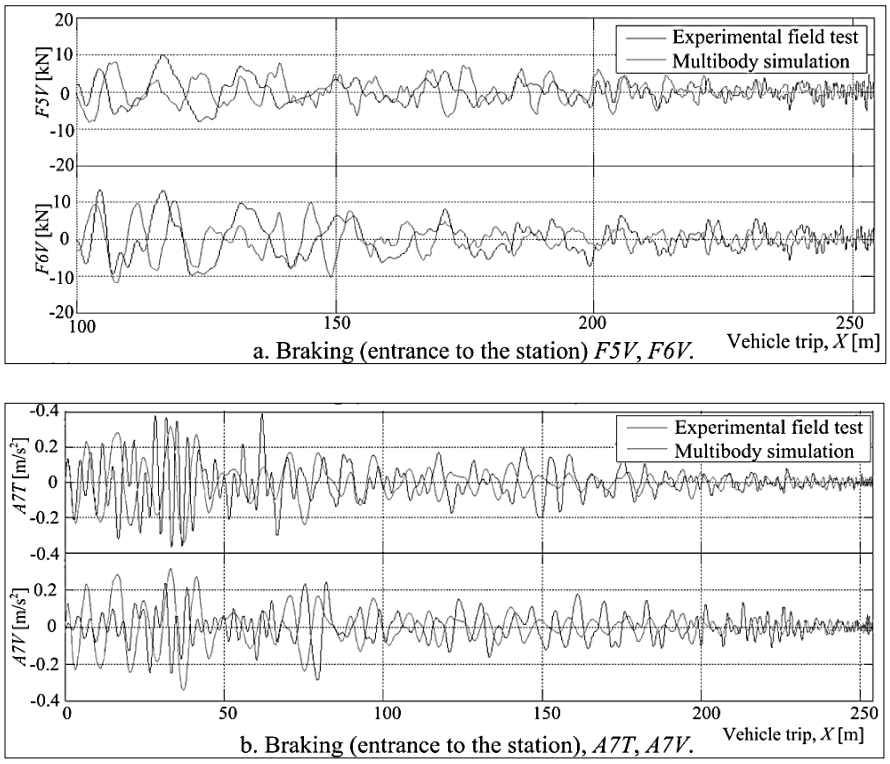

Fig. 6. Signals in time domine
Fig. 6. Señales en el dominio del tiempo

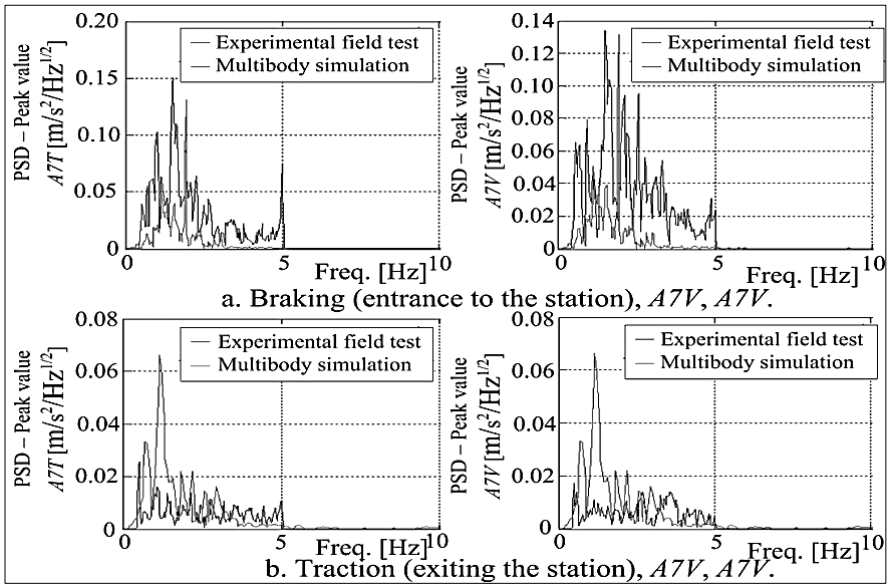

Fig. 7. Signals in frequency domine
Fig. 7. Señales en el dominio de la frecuencia

Received 20.01.2015; accepted in revised form 02.06.2016